PRODUCT INFORMATION

DRILL COLUMN P-250.1

CEDIMA P-250.1 – Maximum flexibility for precise core drilling up to 250 mm.

Order-no.: 50015850

The CEDIMA P-250.1 drilling stand is the ideal solution for a wide variety of core drilling applications. Thanks to its high flexibility and user-friendly operation, it is suitable for a broad range of applications. The drilling stand can be combined with various CEDIMA drilling motors and enables drilling to a diameter of up to 250 mm.

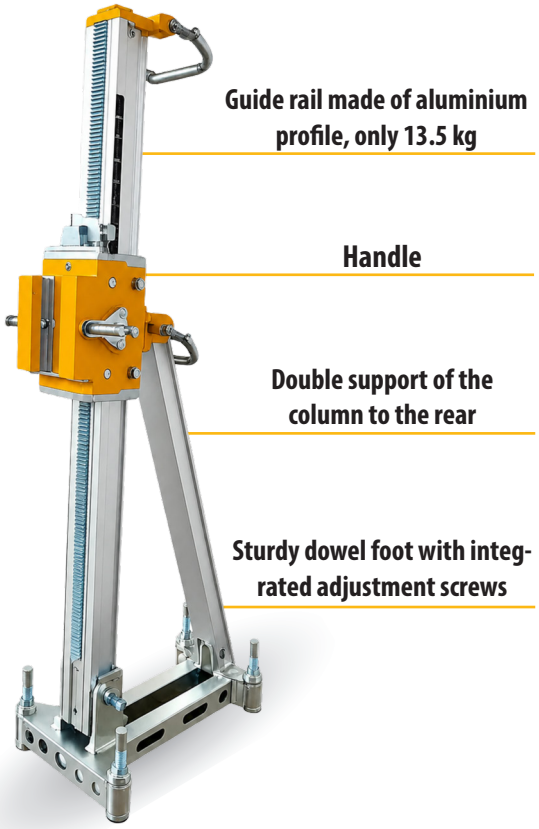

Technical data		Drill Column P-250.1
Max. drill-Ø	mm	250
Max. lifting	mm	660
Dimensions LxWxH	mm	990 x 265 x 410
Diagonal drilling		up to 45° infinitely
Weight	mm	13,5
Suitable drill motors		DKS-15 SP, C-BMH-160, C-BM-17, C-BM-32, C-BM-32 S, DK-17, DK-32

Flexible setup. Precise results.

Your benefits:

- feed carriage: roller guide eccentrically adjustable
- column infinitely adjustable up to 45°
- Feed lever attachable on both sides
- lockable carriage
- quick and simple assembly/ disassembly of the drill motor at the drill column by quick coupling

Scope of delivery P-250.1:

including mounting plate type Z (with collar)
including mounting plate type U (for column-guided motors)

Subject to technical and optical changes and further developments.

CEDIMA Diamantwerkzeug- und Maschinenbaugesellschaft mbH
Siedemeierkamp 5 • 29227 Celle / Germany • Tel. +49 5141 8854 100 • Fax +49 5141 8854 111 • e-mail: info@cedima.com • www.cedima.com